Block Diagram:

A:

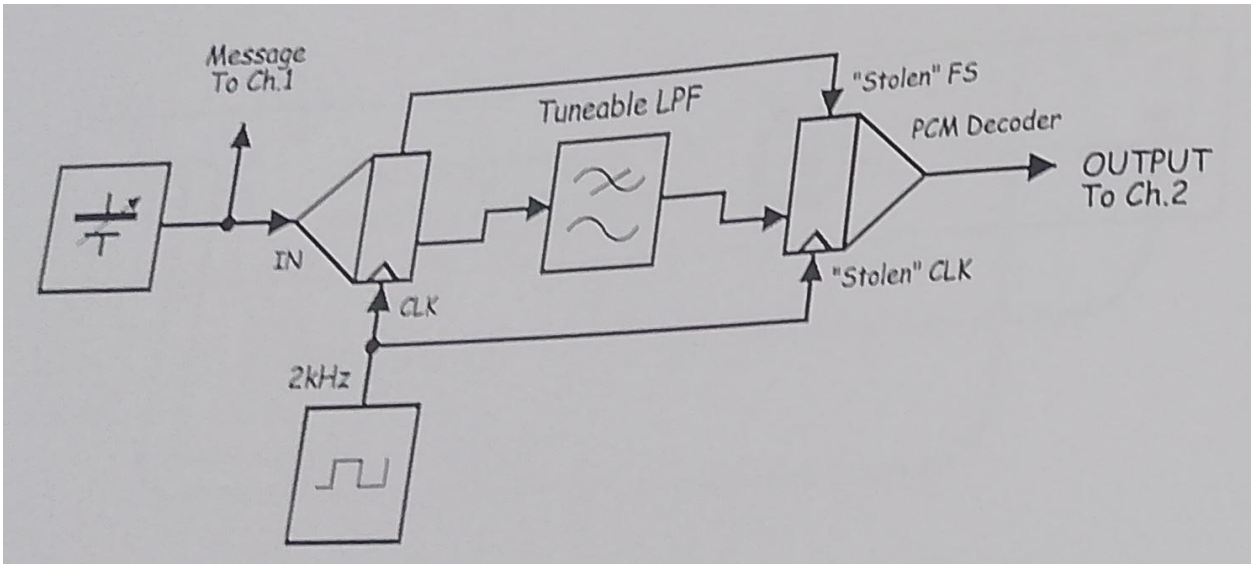

B:

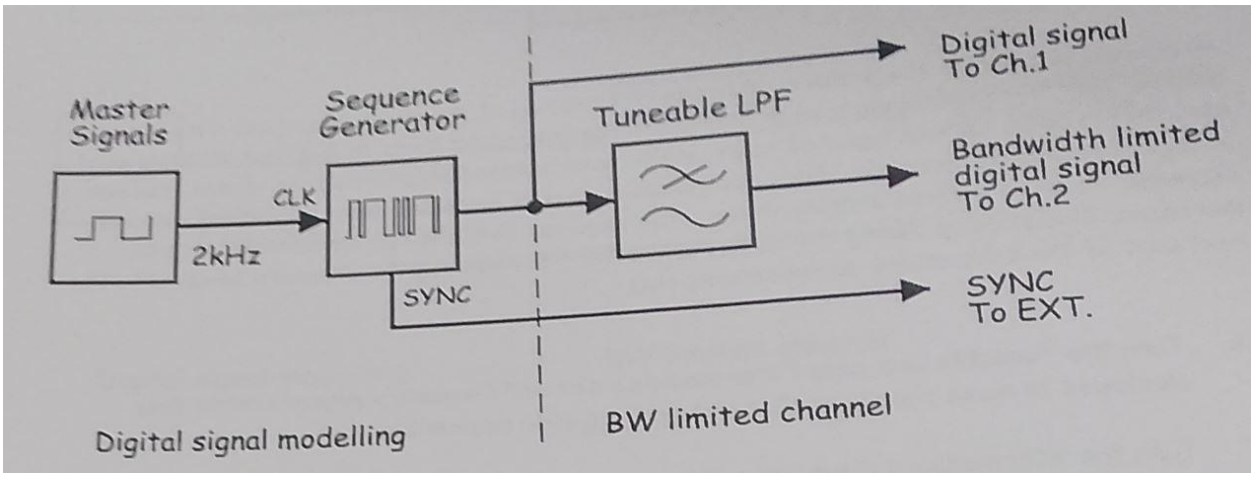

C:

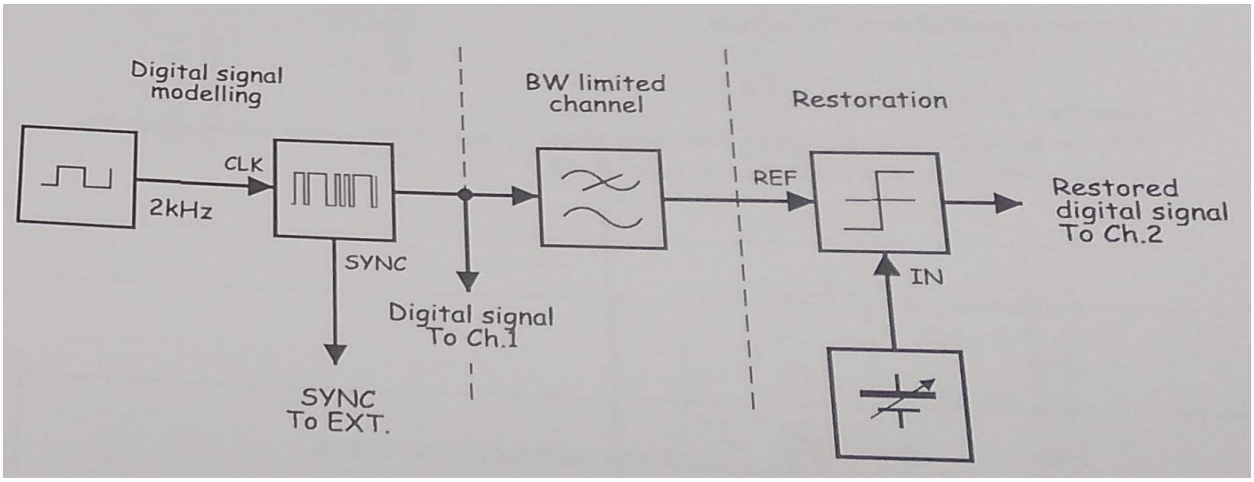

Set Up and Result:

A:

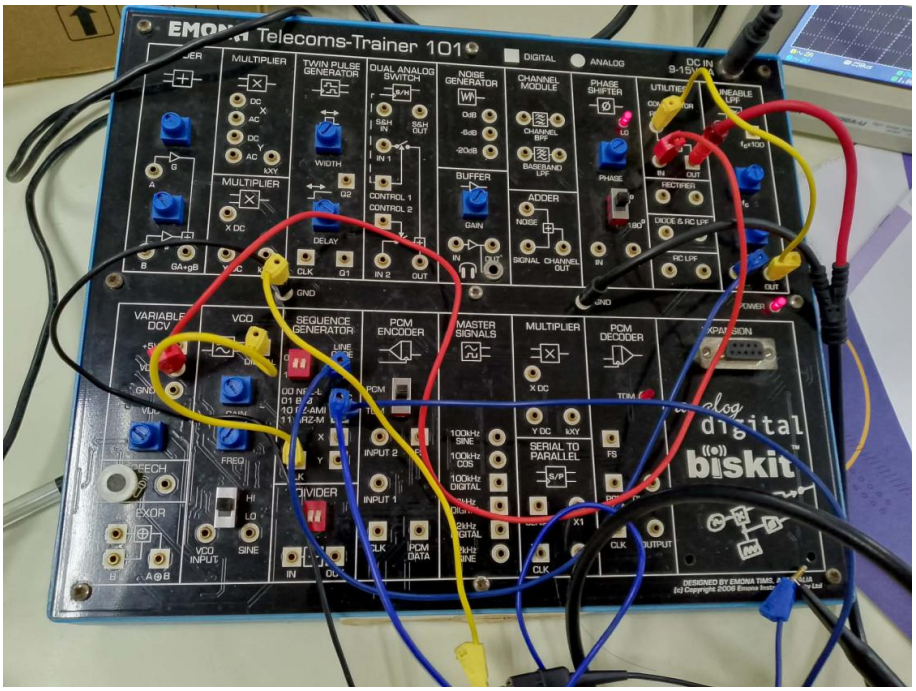

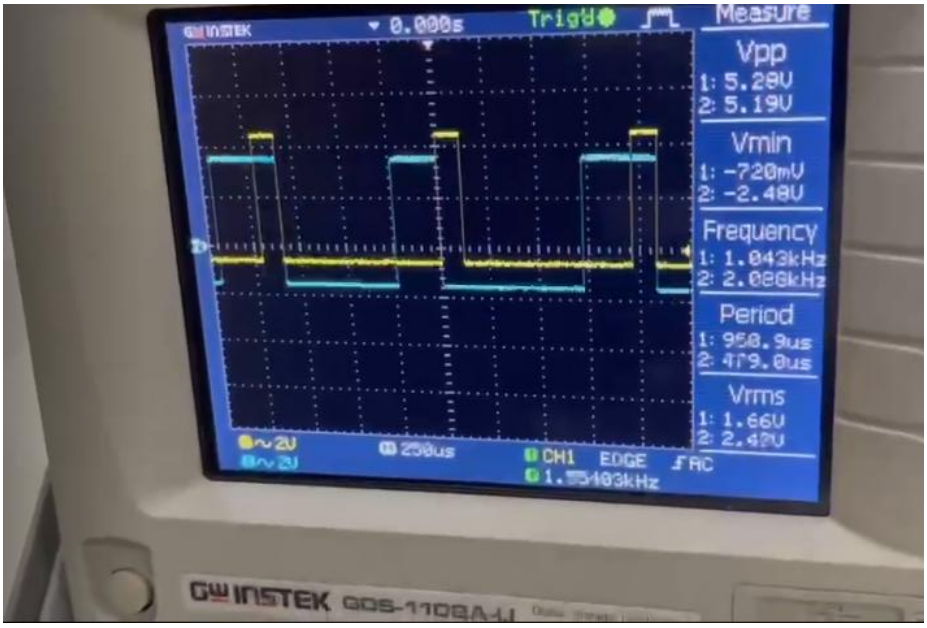

B:

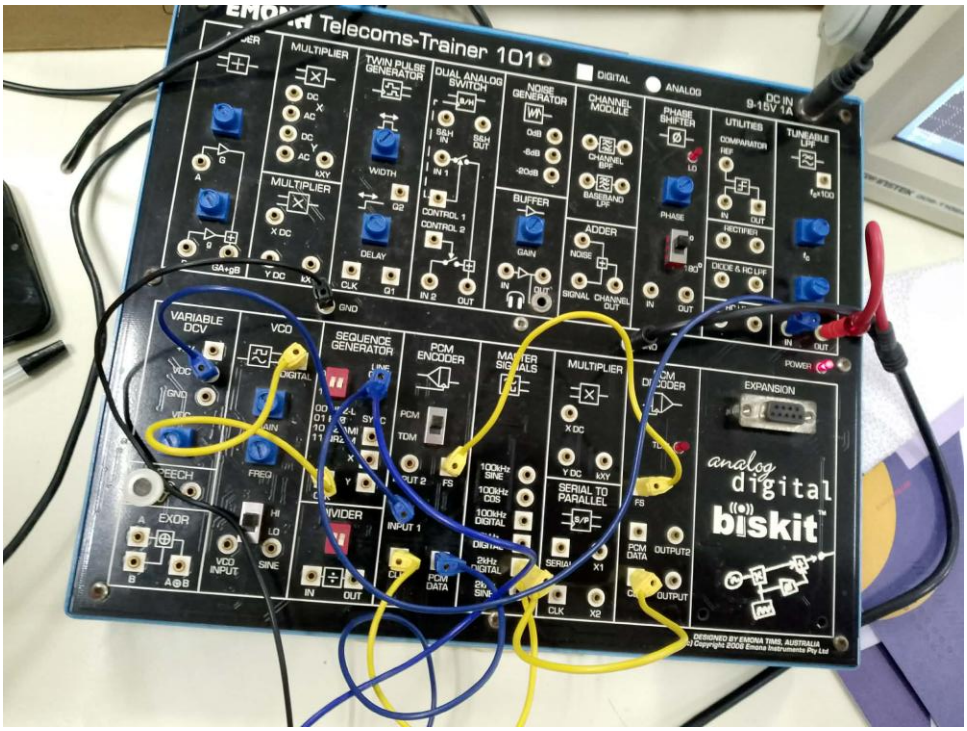
Telecoms-Trainer 101
DIGITAL
ANALOG
MULTIPLIER
TWIN PULSE GENERATOR
DUAL ANALOG SWITCH
NOISE GENERATOR
CHANNEL MODULE
PHASE SHIFTER
UTILITIES
TUNEABLE LPF
BUFFER
ADDER
VARIABLE DCV
VCO
SEQUENCE GENERATOR
PCM ENCODER
MASTER SIGNALS
EXPANSION
SERIAL TO PARALLEL
DIVIDER
EXOR
analog digital biskit

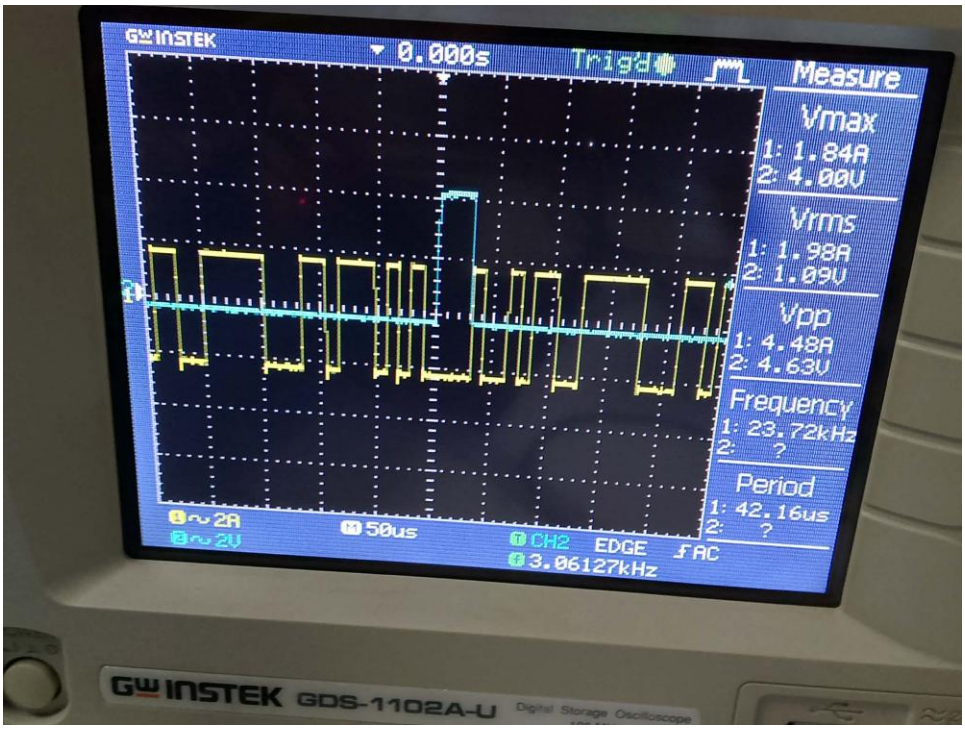
GW INSTEK
0.000s
Trig'd
Measure
Vmax
1: 1.84A
2: 4.00V
Vrms
1: 1.98A
2: 1.09V
Vpp
1: 4.48A
2: 4.63V
Frequency
1: 23.72kHz
2: ?
Period
1: 42.16us
2: ?
2A
2V
50us
CH2 EDGE AC
3.06127kHz
GW INSTEK GDS-1102A-U

C:

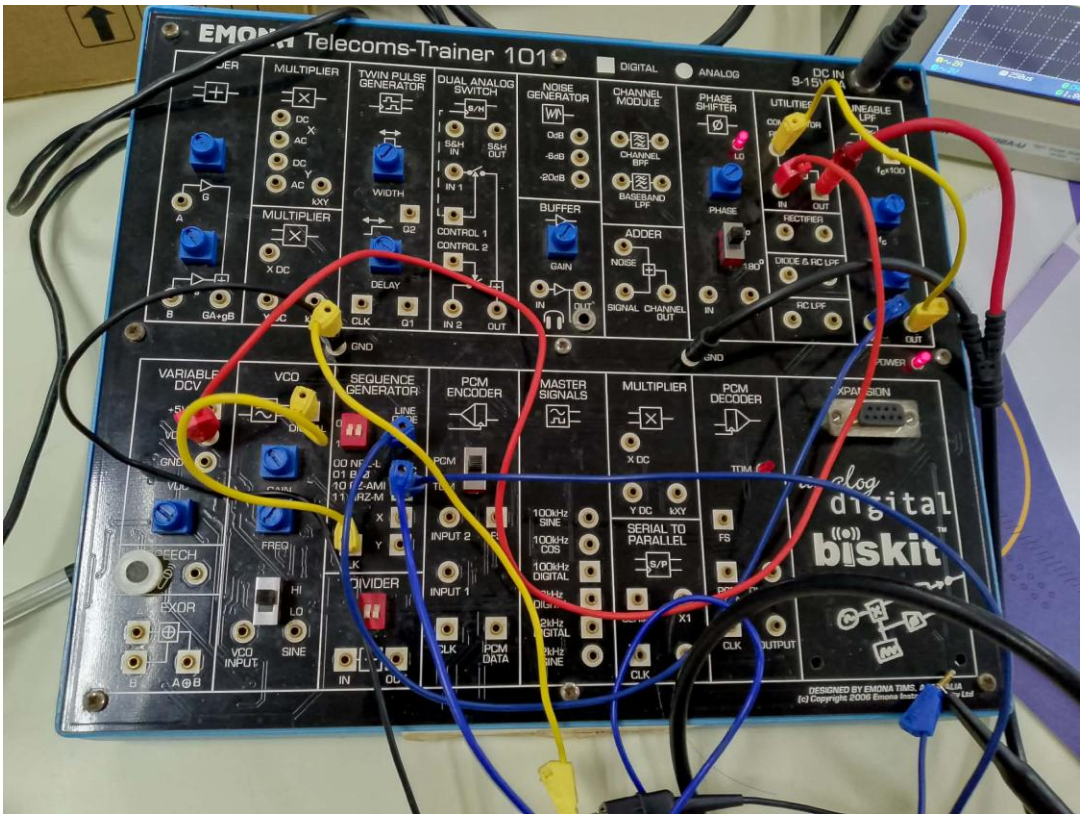
Telecoms-Trainer 101
DIGITAL
ANALOG
MULTIPLIER
TWIN PULSE GENERATOR
DUAL ANALOG SWITCH
NOISE GENERATOR
CHANNEL MODULE
PHASE SHIFTER
BUFFER
ADDER
VARIABLE DCV
VCO
SEQUENCE GENERATOR
PCM ENCODER
MASTER SIGNALS
PCM DECODER
SERIAL TO PARALLEL
DIVIDER
EXPANSION
biskit

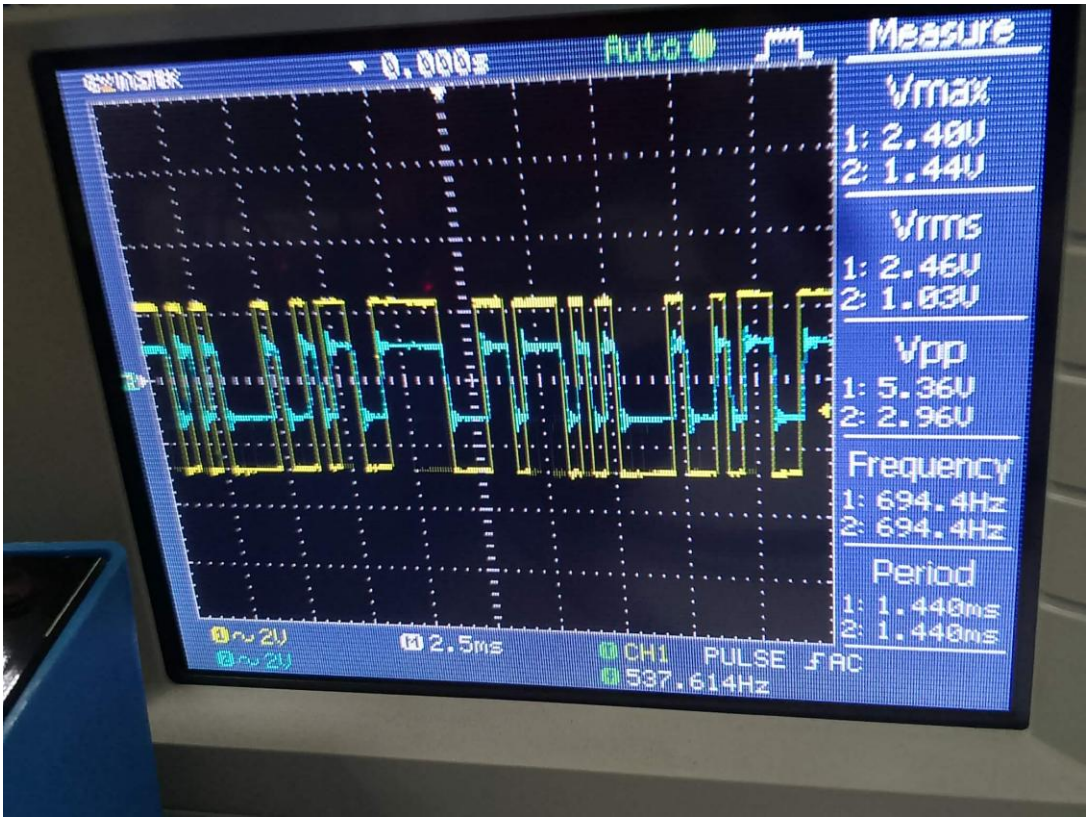
Measure
Vmax
1: 2.40V
2: 1.44V
Vrms
1: 2.46V
2: 1.03V
Vpp
1: 5.36V
2: 2.96V
Frequency
1: 694.4Hz
2: 694.4Hz
Period
1: 1.440ms
2: 1.440ms
2.5ms
CH1 PULSE AC
537.614Hz